Push-pull valve(5/2way)

4L Series

Specification

Model	4L110-06	4L210-06	4L210-08	4L310-08	4L310-10
Fluid	Air (to be filtered by 40 μm filter element)				
Operating	Manual control direct acting type)				
Port size[Note1]	1/8"		1/4"		3/8"
Orifice size	12.0mm² (Cv=0.67)	14.0mm² (Cv=0.78)	16.0mm² (Cv=0.89)	25.0mm² (Cv=1.39)	30.0mm² (Cv=1.67)
Valve type	5/2 Way				
Lubrication [Note2]	Not required				
Pressure range	0~1.0MPa(0~145psi)				
Proof pressure	1.5MPa(215psi)				
Temperature	-20~70℃				
Material body	Aluminum alloy				

[Note1] G thread is available.
[Note2] Once lubricated air is used, continue with same medium to optimise valve life span. It is suggested to use ISO VG32 lubricant or the oil with the same grade.

Symbol

Inner structure

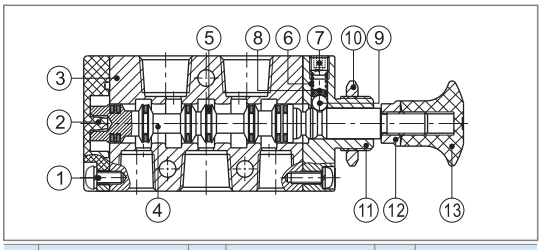

No.	Item	No.	Item	No.	Item
1	Round head screw	6	Spring	11	Top cover
2	Bottom cover	7	Stop screw	12	Safety nut
3	Body	8	Spring base	13	Hand grip
4	Spool	9	Steel ball		
5	O-ring	10	Hexagon nut		

Ordering code

4L 2 10 08 G

① ② ③ ④ ⑤

①Model	②Code	③Valve type	④Port size	⑤Thread type
4L: 5 port 2 position push-pull valve	1: 100 Series	10: 2 position	06: 1/8"	G: G
	2: 200 Series		06: 1/8" 08: 1/4"	
	3: 300 Series		08: 1/4" 10: 3/8"	

Flow chart

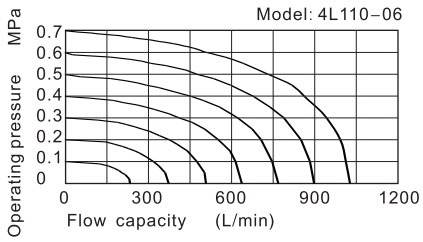

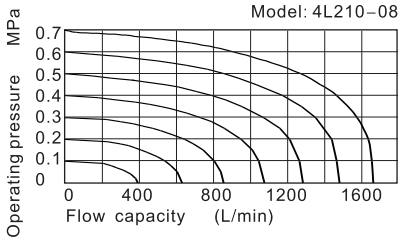

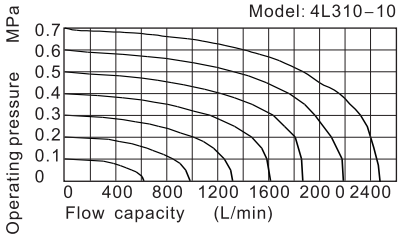

Dimensions

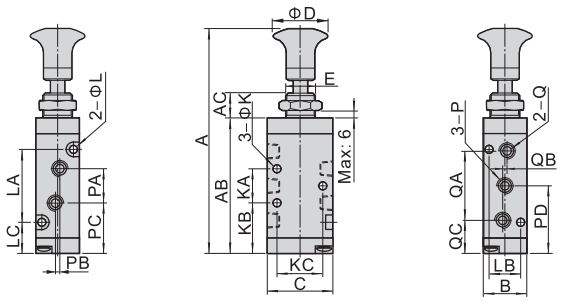

Item\Model	4L11006	4L21006	4L21008	4L31008	4L31010
A	98	106	106	121.5	121.5
AB	58.8	65.8	65.8	81	81
AC	10	10	10	10	10
B	18	22	22	27	27
C	27	35	35	40	40
D	25	25	25	25	25
E	M12×0.75	M14×1.0	M14×1.0	M16×1.0	M16×1.0
K	3.3	4.3	4.3	4.3	4.3
KA	14	20	20	24	24
KB	22	22.5	22.5	28.5	28.5
KC	19	23.5	23.5	27.5	27.5
L	3.3	3.3	3.3	4.3	4.3
LA	30	38	38	50	50
LB	13	17	17	20	20
LC	14	13.5	13.5	15.5	15.5
P	1/8"	1/8"	1/4"	1/4"	1/4"
PA	16	18	21	22	24
PB	3	0	3	0	4
PC	21	23.5	22	29.5	28.5
PD	29	32.5	32.5	40.5	40.5
Q	1/8"	1/8"	1/8"	1/4"	3/8"
QA	28	36	36	45	45
QB	2	0	0	0	0
QC	15	14.5	14.5	18	18